3) M5236ML (XA0104)
Voltage Regulator

Test Circuit

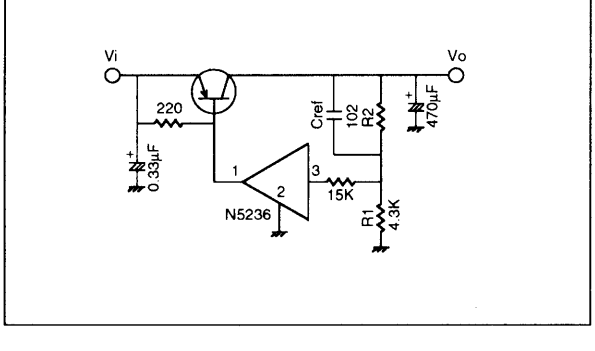

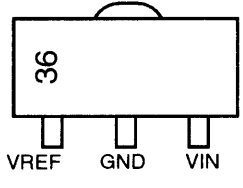

M5236ML

****

M5236ML
IL00

ADJUSTABLE VOLTAGE REGULATOR

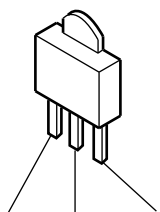

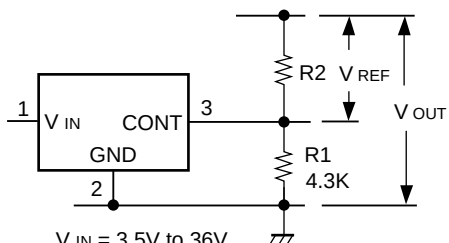

V_{IN} = 3.5V to 36V

V_{OUT} = 1.5V to 33V

$V_{OUT} = V_{REF}\left(1+\frac{R2}{R1}\right) \fallingdotseq 1.26\text{x}\left(1+\frac{R2}{4.3}\right)$ (V)

(R1 = 4.3KΩ, $V_{REF} \fallingdotseq 1.26$V)