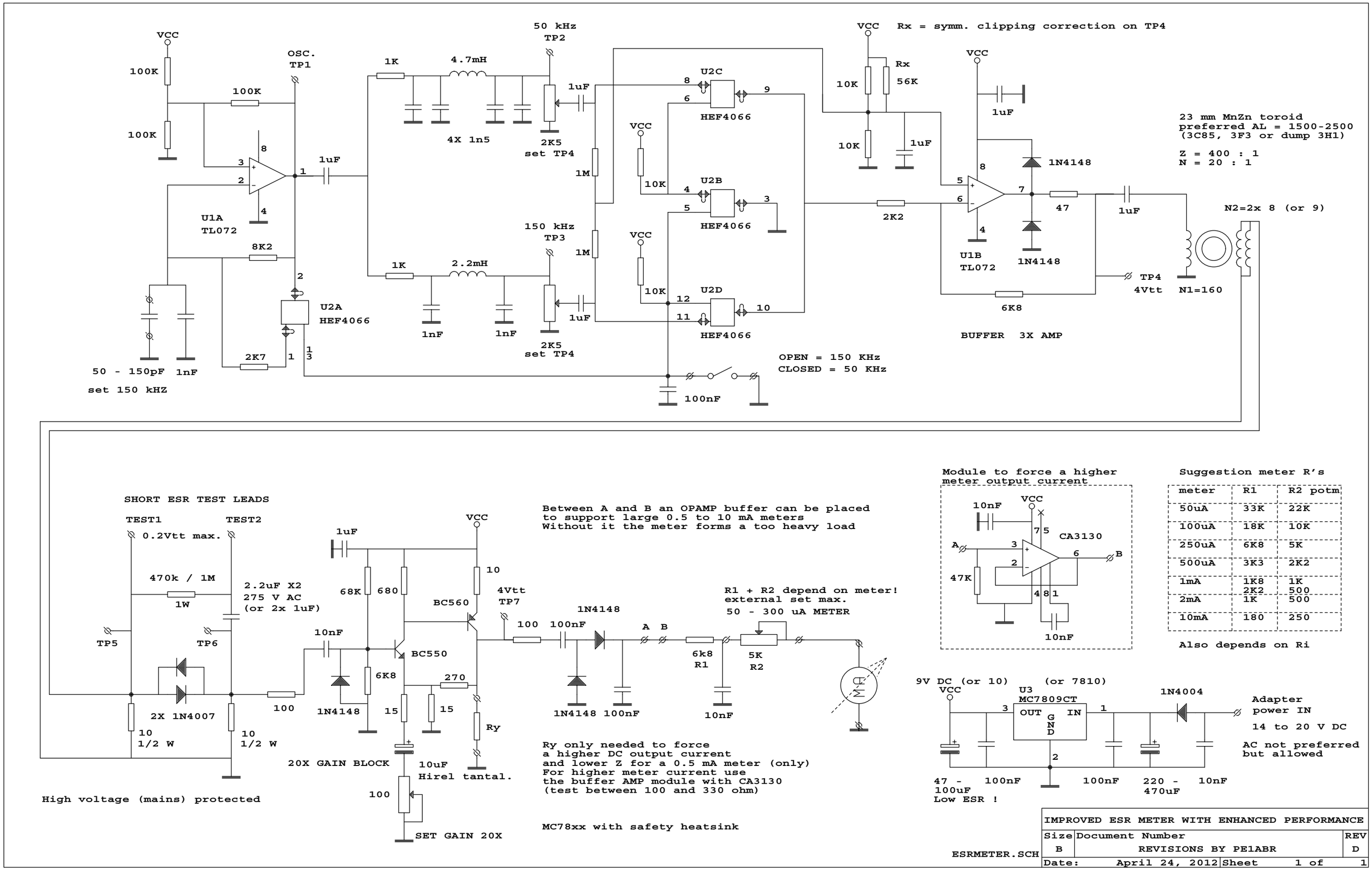

Suggestion meter R's

meter	R1	R2 potm
50uA	33K	22K
100uA	18K	10K
250uA	6K8	5K
500uA	3K3	2K2
1mA	1K8 2K2	1K 500
2mA	1K	500
10mA	180	250

Also depends on Ri

IMPROVED ESR METER WITH ENHANCED PERFORMANCE		
Size B	Document Number REVISIONS BY PE1ABR	REV D
Date: April 24, 2012	Sheet 1 of 1	

ESRMETER.SCH